YASKAWA

Machine Controller MP2000 Series

Analog Input/Analog Output Module
AI-01/AO-01 USER'S MANUAL

Model: JAPMC-AN2300-E
JAPMC-AN2310-E

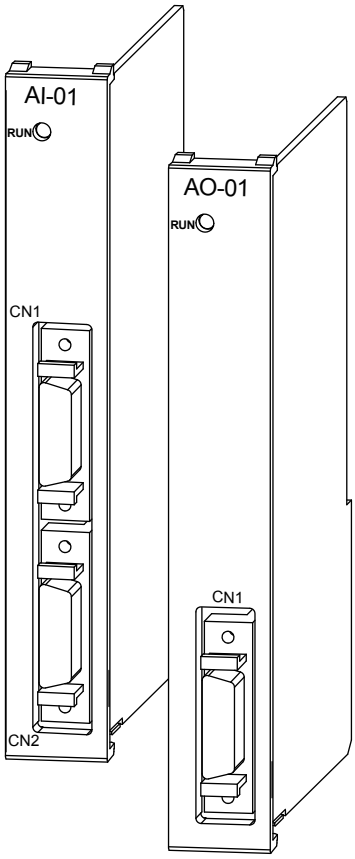

MANUAL NO. SIEP C880700 26C

Using this Manual

AI-01 and AO-01 indicates the analog input module and the analog output module for the MP2000 series Machine Controller.

Please read this manual to ensure correct usage of the AI-01 and AO-01. Keep this manual in a safe place for future reference.

■ Graphic Symbols Used in this Manual

The graphic symbols used in this manual indicate the following type of information.

- This symbol is used to indicate important information that should be memorized or minor precautions, such as precautions that will result in alarms if not heeded.

■ Indication of Reverse Signals

In this manual, the names of reverse signals (ones that are valid when low) are written with a forward slash (/) before the signal name, as shown in the following example:

Notation Examples

- $\overline{\text{S-ON}}$ = /S-ON
- $\overline{\text{P-CON}}$ = /P-CON

■ Copyrights

■ Related Manuals

Refer to the following related manuals as required.

Thoroughly check the specifications, restrictions, and other conditions of the product before attempting to use it.

Manual Name	Manual Number	Contents
Machine Controller MP2300 Communication Module User's Manual	SIEPC88070004□	Describes the functions, specifications, and application methods of the MP2300 Communication Modules (217IF, 218IF, 260IF, 261IF).
Machine Controller MP900 Series User's Manual Ladder Programming	SIEZ-C887-1.2□	Describes the instructions used in MP900/MP2000 ladder programming.
Machine Controller MP□□ User's Manual Motion Programming	SIEZ-C887-1.3□	Describes the instructions used in MP900/MP2000 motion programming.
Machine Controller MP900/MP2000 Series MPE720 Software for Programming Device User's Manual	SIEPC88070005□	Describes how to install and operate the MP900/MP2000 Series programming system (MPE720).
Σ Series SGM□/SGD User's Manual	SIE-S800-26.3□	Describes the Σ Series SERVOPACK models, specifications and capacity selection methods.
Σ Series SGM□/SGDB User's Manual	SIE-S800-26.4□	Describes the Σ Series SERVOPACK models, specifications and capacity selection methods.
Σ-II Series SGM□H/SGDM User's Manual	SIEPS80000005□	Describes the installation, wiring, trial operation, function applications methods, maintenance, and inspection of the Σ-II Series SERVOPACKs.
Σ-II Series SGM□H/SGDM User's Manual	SIEPS80000015□	Describes the installation, wiring, trial operation, function applications methods, maintenance, and inspection of the Σ-II Series SERVOPACKs.
Σ-III Series SGM□S/SGDS User's Manual	SIEPS80000000□	Describes the models, capacities, selection methods, ratings, characteristics, diagrams, cables, peripheral devices, wiring, panel installation, trial operation, adjustment, function application methods, maintenance, and inspection of the Σ-III Series SERVOPACKs and Servomotors.
Σ-III Series SGM□S/SGDS Digital Operator Instructions	TOBPS80000001□	Describes the operation methods of the JUSP-OP05A Digital Operator.
Σ-III Series SGM□S/SGDS User's Manual For MECHATROLINK-II communications	SIEPS80000011□	Describes the models, capacities, selection methods, ratings, characteristics, diagrams, cables, peripheral devices, wiring, panel installation, trial operation, adjustment, function application methods, maintenance, inspection, and MECHATROLINK communication of the ∑-III Series SERVOPACKs and Servomotors.
Machine Controller MP900/MP2000 Series Linear Servomotor Manual	SIEPC88070006□	Describes the connection methods, setting methods, and other information for Linear Servomotors.
Machine Controller MP900 Series New Ladder Editor Programming Manual	SIE-C887-13.1□	Describes the programming instructions of the New Ladder Editor, which assists MP900/MP2000 Series design and maintenance.
Machine Controller MP900 Series New Ladder Editor User's Manual	SIE-C887-13.2□	Describes the operating methods of the New Ladder Editor, which assists MP900/MP2000 Series design and maintenance.
Machine Controller MP900/MP2000 Series User's Manual MECHATROLINK System	SIEZ-C887-5.1□	Describes the distributed I/O Module for the MECHATROLINK Modules for MP900/MP2000 Series Machine Controllers.

Safety Information

The following conventions are used to indicate precautions in this manual. These precautions are provided to ensure the safe operation of the MP2000 series and connected devices. Information marked as shown below is important for the safety of the user. Always read this information and heed the precautions that are provided.
The conventions are as follows:

⚠ WARNING	Indicates precautions that, if not heeded, could possibly result in loss of life, serious injury, or property damage.
⚠ CAUTION	Indicates precautions that, if not heeded, could result in relatively serious or minor injury, or property damage. If not heeded, even precautions classified under ⚠ CAUTION can lead to serious results depending on circumstances.
⃠ PROHIBITED	Indicates prohibited actions. Specific prohibitions are indicated inside ⃠ . For example, indicates prohibition of open flame.
❗ MANDATORY	Indicates mandatory actions. Specific actions are indicated inside ● . For example, indicates mandatory grounding.

Safety Precautions

The following precautions are for checking products on delivery, storage, transportation, installation, wiring, operation, maintenance, inspection, and disposal. These precautions are important and must be observed.

⚠ WARNING

- Before starting operation in combination with the machine, ensure that an emergency stop procedure has been provided and is working correctly.
  There is a risk of injury.
- Do not touch anything inside the MP2000 series.
  There is a risk of electrical shock.
- Always keep the front cover attached when power is being supplied.
  There is a risk of electrical shock.
- Observe all procedures and precautions given in this manual for trial operation.
  Operating mistakes while the servomotor and machine are connected can cause damage to the machine or even accidents resulting in injury or death.
- Do not remove the module, front cover, cables, connector while power is being supplied.
  There is a risk of electrical shock.
- Do not damage, pull on, apply excessive force to, place heavy objects on, or pinch cables.
  There is a risk of electrical shock, operational failure or burning of the MP2000 series.
- Do not attempt to modify the MP2000 series in any way.
  There is a risk of injury or device damage.
- Do not approach the machine when there is a momentary interruption to the power supply. When power is restored, the machine controller and the connecting devices may start operation suddenly. Provide suitable safety measures to protect people when operation restarts.
  There is a risk of injury.
- Do not allow installation, disassembly, or repairs to be performed by anyone other than specified personnel.
  There is a risk of electrical shock or injury.

■ Storage and Transportation

⚠ CAUTION

- Do not store or install the MP2000 series in the following locations.
  - Direct sunlight
  - Ambient temperature exceeds the storage or operating conditions
  - Ambient humidity exceeds the storage or operating conditions
  - Rapid changes in temperature or locations subject to condensation
  - Corrosive or flammable gas
  - Excessive dust, dirt, salt, or metallic powder
  - Water, oil, or chemicals
  - Vibration or shock
- Do not subject the MP2000 series to halogen gases, such as fiuorine, chlovine, bromine, and iodine, at any time even during transportation or installation.
  There is a risk of device damage or injury.
- Do not overload the MP2000 series during transportation.
  There is a risk of injury or an accident.

■ Storage and Transportation（cont'd）

⚠ CAUTION

- If disinfectants or insecticides must be used to treat packing materials such as wooden frames, pallets, or plywood, the packing materials must be treated before the product is packaged, and methods other than fumigation must be used.
  Example: Heat treatment, where materials are kiln-dried to a core temperature of 56°C for 30 minutes or more.
  If the electronic products, which include stand-alone products and products installed in machines, are packed with fumigated wooden materials, the electrical components may be greatly damaged by the gases or fumes resulting from the fumigation process. In particular, disinfectants containing halogen, which includes chlorine, fluorine, bromine, or iodine can contribute to the erosion of the capacitors.

■ Installation

⚠ CAUTION

- Never use the MP2000 series in locations subject to water, corrosive atmospheres, or flammable gas, or near burnable objects.
  There is a risk of electrical shock or fire.
- Do not step on the MP2000 series or place heavy objects on the MP2000 series.
  There is a risk of injury.
- Do not allow foreign objects to enter the MP2000 series.
  There is a risk of element deterioration inside, an accident, or fire.
- Always mount the MP2000 series in the specified orientation.
  There is a risk of an accident.
- Do not subject the MP2000 series to strong shock.
  There is a risk of an accident.

■ Wiring

⚠ CAUTION

- Check the wiring to be sure it has been performed correctly.
  There is a risk of motor run-away, injury, or an accident.
- Always use a power supply of the specified voltage.
  There is a risk of burning.
- In places with poor power supply conditions, take all steps necessary to ensure that the input power supply is within the specified voltage range.
  There is a risk of device damage.
- Install breakers and other safety measure to provide protection against shorts in external wiring.
  There is a risk of fire.
- Provide sufficient shielding when using the MP2000 series in the following locations.
  There is a risk of device damage.
  - Noise, such as from static electricity
  - Strong electromagnetic or magnetic fields
  - Radiation
  - Near to power lines

■ Selecting, Separating, and Laying External Cables

⚠ CAUTION

- Consider the following items when selecting the I/O signal lines (external cables) to connect the MP2000 series to external devices.
  - Mechanical strength
  - Noise interference
  - Wiring distance
  - Signal voltage, etc.
- Separate the I/O signal lines from the power lines both inside and outside the control box to reduce the influence of noise from the power lines.
  If the I/O signal lines and power lines are not separated properly, malfunctioning may result.

Example of Separated External Cables

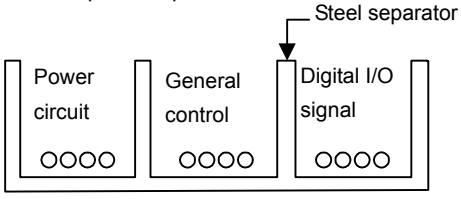

■ Maintenance and Inspection Precautions

⚠ CAUTION

- Do not attempt to disassemble the MP2000 series.
  There is a risk of electrical shock or injury.
- Do not change wiring while power is being supplied.
  There is a risk of electrical shock or injury.

■ Disposal Precautions

⚠ CAUTION

- Dispose of the MP2000 series as general industrial waste.

■ General Precautions

Observe the following general precautions to ensure safe application.

- The products shown in illustrations in this manual are sometimes shown without covers or protective guards. Always replace the cover or protective guard as specified first, and then operate the products in accordance with the manual.
- The drawings presented in this manual are typical examples and may not match the product you received.
- If the manual must be ordered due to loss or damage, inform your nearest Yaskawa representative or one of the offices listed on the back of this manual.

Warranty

(1) Details of Warranty

■ Warranty Period

The warranty period for a product that was purchased (hereinafter called “delivered product”) is one year from the time of delivery to the location specified by the customer or 18 months from the time of shipment from the Yaskawa factory, whichever is sooner.

■ Warranty Scope

Yaskawa shall replace or repair a defective product free of charge if a defect attributable to Yaskawa occurs during the warranty period above. This warranty does not cover defects caused by the delivered product reaching the end of its service life and replacement of parts that require replacement or that have a limited service life.

This warranty does not cover failures that result from any of the following causes.

1. Improper handling, abuse, or use in unsuitable conditions or in environments not described in product catalogs or manuals, or in any separately agreed-upon specifications
2. Causes not attributable to the delivered product itself
3. Modifications or repairs not performed by Yaskawa
4. Abuse of the delivered product in a manner in which it was not originally intended
5. Causes that were not foreseeable with the scientific and technological understanding at the time of shipment from Yaskawa
6. Events for which Yaskawa is not responsible, such as natural or human-made disasters

(2) Limitations of Liability

1. Yaskawa shall in no event be responsible for any damage or loss of opportunity to the customer that arises due to failure of the delivered product.
2. Yaskawa shall not be responsible for any programs (including parameter settings) or the results of program execution of the programs provided by the user or by a third party for use with programmable Yaskawa products.
3. The information described in product catalogs or manuals is provided for the purpose of the customer purchasing the appropriate product for the intended application. The use thereof does not guarantee that there are no infringements of intellectual property rights or other proprietary rights of Yaskawa or third parties, nor does it construe a license.
4. Yaskawa shall not be responsible for any damage arising from infringements of intellectual property rights or other proprietary rights of third parties as a result of using the information described in catalogs or manuals.

(3) Suitability for Use

1. It is the customer's responsibility to confirm conformity with any standards, codes, or regulations that apply if the Yaskawa product is used in combination with any other products.
2. The customer must confirm that the Yaskawa product is suitable for the systems, machines, and equipment used by the customer.
3. Consult with Yaskawa to determine whether use in the following applications is acceptable. If use in the application is acceptable, use the product with extra allowance in ratings and specifications, and provide safety measures to minimize hazards in the event of failure.
   - Outdoor use, use involving potential chemical contamination or electrical interference, or use in conditions or environments not described in product catalogs or manuals
   - Nuclear energy control systems, combustion systems, railroad systems, aviation systems, vehicle systems, medical equipment, amusement machines, and installations subject to separate industry or government regulations
   - Systems, machines, and equipment that may present a risk to life or property
   - Systems that require a high degree of reliability, such as systems that supply gas, water, or electricity, or systems that operate continuously 24 hours a day
   - Other systems that require a similar high degree of safety
4. Never use the product for an application involving serious risk to life or property without first ensuring that the system is designed to secure the required level of safety with risk warnings and redundancy, and that the Yaskawa product is properly rated and installed.
5. The circuit examples and other application examples described in product catalogs and manuals are for reference. Check the functionality and safety of the actual devices and equipment to be used before using the product.
6. Read and understand all use prohibitions and precautions, and operate the Yaskawa product correctly to prevent accidental harm to third parties.

(4) Specifications Change

The names, specifications, appearance, and accessories of products in product catalogs and manuals may be changed at any time based on improvements and other reasons. The next editions of the revised catalogs or manuals will be published with updated code numbers. Consult with your Yaskawa representative to confirm the actual specifications before purchasing a product.

CONTENTS

INDEX

Revision History

1

Applicable Machine Controllers

This chapter explains on the MP2000 series Machine Controller, that can install the AI-01/AO-01 Module.

1.1 Applicable Machine Controllers

1.1.1 AI-01 Module Applicable Machine Controllers

The table below lists the MP2000-series Machine Controllers on which the AI-01 Module can be mounted.

Name		Model	Applicable CPU Version	Applicable MPE720 Version	Max. Number of AI-01 Modules that Can Be Connected (AI-01 ＋ AO-01)	Remarks
MP 2200	100/200-VACInput Base Unit	JEPMC-BU2200	Ver. 2.40 or later	Ver. 5.31 or later	When using the CPU-01*1: 30 modules, When using the CPU-02*2: 31 modules	Max. Number of AI-01 Modules that Can Be Connected when using 4 racks (extended to the maximum)*3
	24-VDC Input Base Unit	JEPMC-BU2210	Ver. 2.40 or later	Ver. 5.31 or later		
MP2300		JEPMC-MP2300	Ver. 2.40 or later	Ver. 5.31 or later	2 modules	
MP2100M		JAPMC-MC2140	Ver. 2.40 or later	Ver. 5.31 or later	24 modules	Can be mounted on an expansion rack when mounting an expansion I/F board MP2100MEX (model: JAPMC-EX2200) and connecting an expansion rack (can be used also as the MP2200 base unit). Max. Number of AI-01 Modules that Can be Connected when using 3 racks (extended to the maximum)*3.

* 1. CPU Module for MP2200. Model: JAPMC-CP2200.
* 2. CPU Module for MP2200. Model: JAPMC-CP2210, with one slot for CF card and one USB port
* 3. The Connection Module EXIOIF (Model: JAPMC-EX2200) is required between racks.

- A1-01 Module cannot be mounted on the following MP2000-series Machine Controllers: MP2100, MP2500, and MP2500M

1.1.2 AO-01 Module Applicable Machine Controllers

The table below lists the MP2000 series Machine Controllers to which the AO-01 Module can be mounted.

Name		Model	Applicable CPU Version	Applicable MPE720 Version	Max. Number of AO-01 Modules that Can be Connected (AI-01 + AO-01)	Remarks
MP 2200	100/200-VAC Input Base Unit	JEPMC-BU2200	Ver. 2.44 or later	Ver. 5.33 or later	When using a CPU-01*1: 30 modules When using a CPU-02*2: 31 modules	Max. Number of AO-01 Modules that Can be Connected when using 4 racks (extended to the maximum)*3
	24-VDC Input Base Unit	JEPMC-BU2210	Ver. 2.44 or later	Ver. 5.33 or later		
MP2300		JEPMC-MP2300	Ver. 2.44 or later	Ver. 5.33 or later	2 modules	
MP2100M		JAPMC-MC2140	Ver. 2.44 or later	Ver. 5.33 or later	24 modules	Can be mounted on a expansion rack when mounting a expansion I/F board MP2100MEX (model: JAPMC-EX2200) and connecting a expansion rack (can be used also as the MP2200 base unit). Max. Number of AO-01 Modules that Can be Connected when using 3 racks (extended to the maximum)*3.

* 1. CPU Module for MP2200. Model: JAPMC-CP2200
* 2. CPU Module for MP2200. Model: JAPMC-CP2210, with one slot for CF card and one USB port
* 3. A connection module EXIOIF (Model: JAPMC-EX2200) is required between racks.

- The AO-01 Module cannot be mounted on the following models of MP2000-series Machine Controllers: MP2100, MP2500, MP2500M

1.2 Mounting/Removing Optional Modules on Machine Controller

Use the following procedure to mount or remove Optional Modules.

- In the photos given here to explain the procedure, a Machine Controller MP2200 and an Optional Module 217-IF-01 are used. The procedure to mount an Optional Module AI-01 or AO-01 on a Machine Controller MP2300 or MP2100M is the same as that to mount 217-IF-01 on MP2200.

1.2.1 Mounting Optional Modules

Use the following procedure to mount Optional Modules.

- For the replacement of Optional Module, refer to *1.2.2 Removing Optional Modules* on page 1-18 to remove the Optional Module to be replaced.

(1) Preparation

1. Backup the Programs

Save the programs written to the Machine Controller in the personal computer using MPE720. (Right-click the Controller Folder, and select ***Transfer - All Files - Dump*** from the pop-up menu.)

2. Remove the Machine Controller and Expansion Racks

a) For MP2300

Turn OFF the power supply and disconnect all the cables from the MP2300. Then, remove the MP2300 from the panel or rack, and place it on a place with sufficient space, such as working table.

b) For MP2200 and MP2100M

Turn OFF the power supply and disconnect all the cables from the expansion rack (MP2200 base unit) where the Optional Module to be replaced is mounted. Then remove the expansion rack and place it in a place with sufficient space, such as working table.

(2) Removing Optional Cover

Use the following procedure if the optional cover (JEPMC-OP2300) is installed on the slot.

1. Remove the battery cover.

Pull the notch on the side of the MP2000 series towards you to remove the battery cover.

2. Remove the cover of Optional Module.

Insert the protruding part of the battery cover into the slot on top of the cover of Optional Module to unhook, as shown in the diagram. Face the front of the battery cover towards you for this operation.

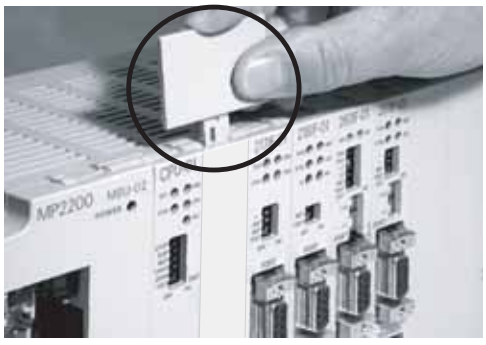

Unhook the bottom in the same way.

(3) Installing Optional Modules

1. Insert Optional Modules.

Guide rails are visible at the top and bottom of the Option Slot, as shown in the following diagram. Line up the Module with the guide rail and insert the Module straight.

- The FG bar on the inside bottom of the Unit Case may be damaged if the Module is inserted without following the guide rail.

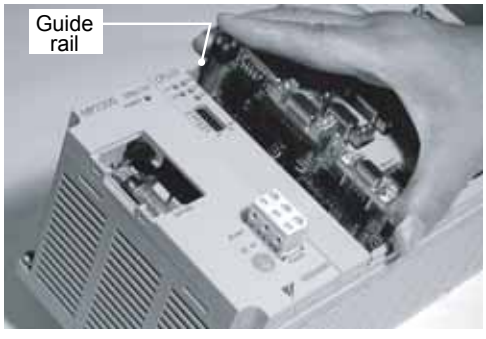

2. Mount on to the mounting base.

Once the Optional Module has been completely inserted, place your hand on the front face of the Optional Module and push hard until the Optional Module has been inserted into the mounting base connectors. The front face of the Optional Module and the hook will be aligned when the Optional Module has been installed properly.

3. Install the panel of the Optional Module.

Place the hole on the bottom of the panel of the Optional Module onto the hook on the bottom of the MP2300.

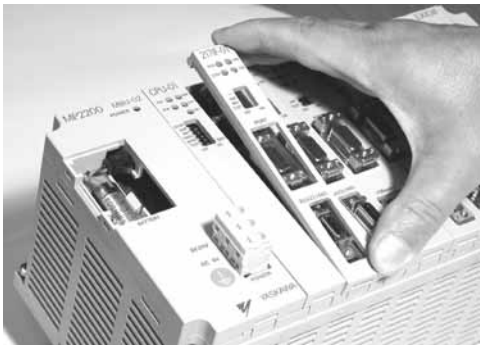

This completes the installation procedure.

1.2.2 Removing Optional Modules

(1) Preparation

1. Backup the Programs

Save the programs written to the Machine Controller in the personal computer using MPE720. (Right-click the Controller Folder, and select ***Transfer - All Files - Dump*** from the pop-up menu.)

2. Remove the Machine Controller and Expansion Racks

a) For MP2300

Turn OFF the power supply and disconnect all the cables from the MP2300. Then, remove the MP2300 from the panel or rack, and place it on a place with sufficient space, such as working table.

b) For MP2200 and MP2100M

Turn OFF the power supply and disconnect all the cables from the expansion rack (MP2200 base unit) where the Optional Module to be replaced is mounted. Then remove the expansion rack and place it in a place with sufficient space, such as working table.

(2) Removing Optional Modules

1. Remove the battery cover.

Pull the notch on the side of the MP2000 series towards you to remove the battery cover.

2. Remove the panel of Optional Module.

Insert the protruding part of the battery cover into the slot on top of the panel of Optional Module to unhook, as shown in the diagram. Face the front of the battery cover towards you for this operation.

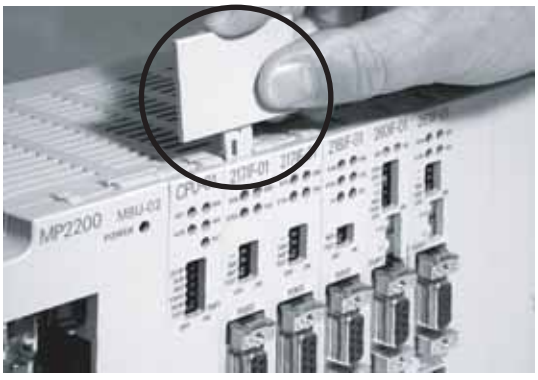

Unhook the bottom in the same way.

3. Remove the Optional Module from the mounting base.

Pull the top of the panel of the Optional Module towards you to remove it. A notch on the Optional Module will be visible from the gap in the cover. Hook the round knob on the battery cover, shown in the diagram, into the notch in the Optional Module.

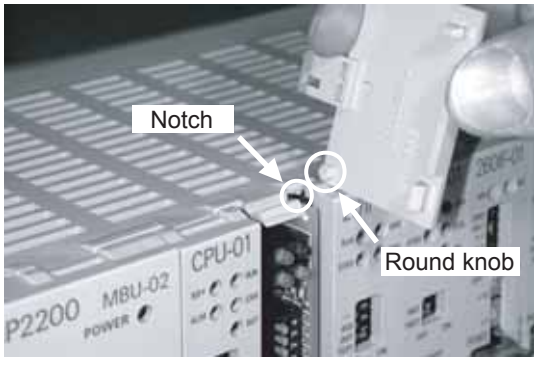

Hold the center of the battery cover as shown in the following diagram. Push the battery cover down and out, rotating from the round knob to disconnect the Module and mounting base connectors, and then pull the Optional Module forward.

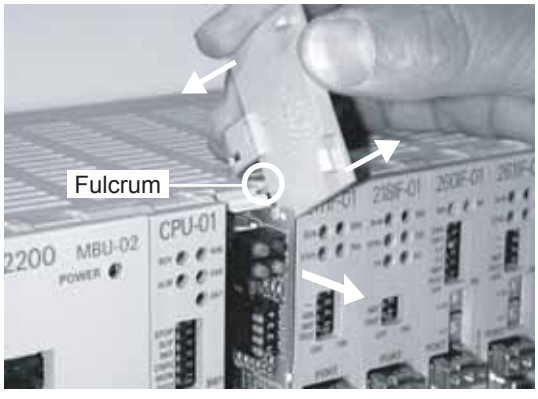

4. Pull out the Optional Module.

Hold the Module on the top and bottom and pull it out straight. Hold the edges of the Module and avoid touching the parts on the Module.

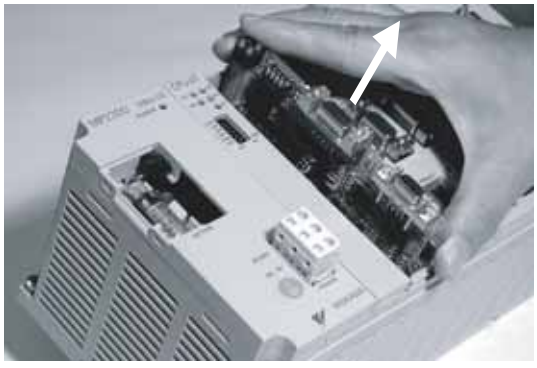

Put the removed Module into the bag that it was supplied with and store it in this bag.

- The optional cover must be installed on the empty slot.

2

AI-01 Module

This chapter explains the detailed specifications and functions, connection methods, and settings of the AI-01 Module.

2.1 AI-01 Module Specifications

This section explains the appearance, function, and specifications of AI-01 module.

2.1.1 AI-01 Module Functions and External Dimensions

The AI-01 module has eight channels for analog input. Three types of analog-input ranges are available – Voltage: -10 V to +10 V, Voltage: 0 V to +10 V, Current: 0 mA to 20 mA.
A maximum of two modules can be mounted in the MP2300 option slot, 30 modules in the MP2000 base unit if four units are connected and CPU-01 is used or 31 if CPU-02 is used; and 24 modules in the MP2100M or MP2100MEX expansion racks if three racks are connected.

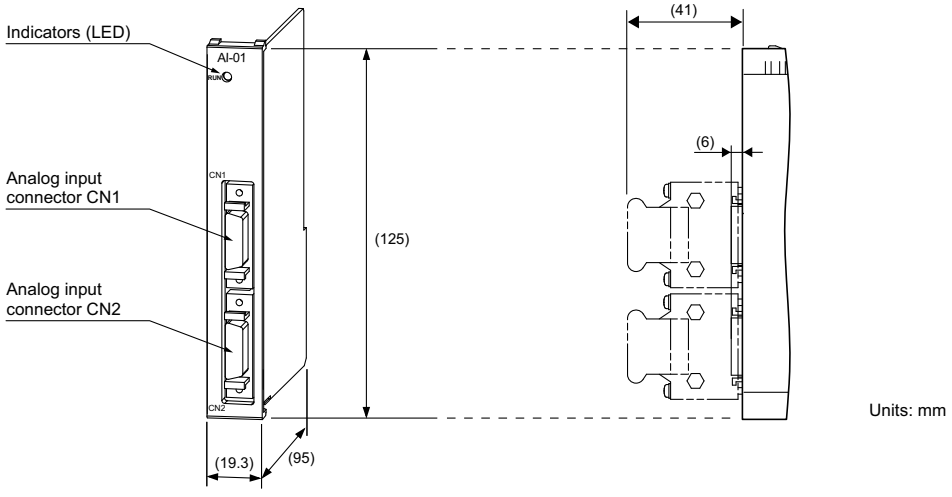

AI-01 Module Appearance

External Dimensions when installing the cable connector (side view)

2.1.2 Specifications

The following table shows the general and hardware specifications, and the details of LED of the AI-01 module.

(1) General Specifications

Item		Specifications
Environmental Conditions	Ambient Operating Temperature	0 to 55 °C
	Ambient Storage Temperature	-25 to 85 °C
	Ambient Operating Humidity	30% to 95% (with no condensation)
	Ambient Storage Humidity	5% to 95% (with no condensation)
	Pollution Level	Pollution level 1 (conforming to JIS B 3501)
	Corrosive Gas	There must be no combustible or corrosive gas.
	Operating Altitude	2,000 m above sea level or lower

Item		Specifications
Mechanical Operating Conditions	Vibration Resistance	Conforming to JIS B 3502: 10 to 57 Hz with single-amplitude of 0.075 mm 57 to 150 Hz with fixed acceleration of 9.8 m/s^2 10 sweeps each in X, Y, and Z directions (sweep time: 1 octave/min)
	Shock Resistance	Conforming to JIS B 3502: Peak acceleration of 147 m/s^2 (15 G) twice for 11 ms each in the X, Y, and Z directions
Electrical Operating Conditions	Noise Resistance	Conforming to EN 61000-6-2, EN 55011 (Group 1, Class A) Power supply noise (FT noise): 2 Kv min., for one minute Radiation noise (FT noise): 1 Kv min., for one minute
Installation Requirements	Ground	Ground to 100 Ω max.
	Cooling Method	Natural cooling

(2) Hardware Specifications

Items			Specifications		
Description			I/O Module		
Name			AI-01		
Model No.			JAPMC-AN2300-E		
Analog Input	Number of Channels		8 channels ((4 channels /1connector)×2)		
	Setting of the channels used		1 to 8 channels (Optional)		
	Insulation		Between channels: non-insulated Between input connector and system power supply: photocoupler insulation		
	Analog Input Range		-10V to +10V	0 to +10V	0 to 20 mA
	Max. Rated Input		±15V		±30 mA
	Input Impedance		20kΩ		250 Ω
	Digital Resolution		16Bit (-31276 to +31276)	15Bit (0 to +31276)	
	Absolute Accuracy*1		100 mV or less *		0.3 mA or less
	Accuracy	25 °C*2	±0.1% (±10 mV)		±0.1% (±0.02 mA)
		0 to 55 °C	±0.3% (±30 mV)		±0.3% (±0.06 mA)
	Input Conversion Time*3		1.4msec or less		
Connector			CN1: Input connector CN2: Input connector		
Indicator			RUN (Green)		
Current Consumption			500mA or less		
Dimensions			Height: 125 mm Depth: 95 mm		
Mass			100 g		

* 1. Indicates if the offset and gain adjustment not to be performed in the MPE720.
* 2. Indicates if the offset and gain adjustment is performed in the MPE720.
* 3. Input conversion time = Delay time from input filter (1 ms or less) + (50 × number of channels used);
Delay time from the input filter peaks at 1 ms between -10 V and +10 V.

(3) LED Indicator

RUN

Indicator name	Indicator Color	Status when ON	Status when OFF
RUN	Green	Operates correctly	No operate

2.1.3 Input Characteristics

This section explains the input characteristics table corresponding to the analog input value and voltage and current mode, and input characteristic drawings.

(1) Input Characteristics and Corresponding Modes

Analog input value	Voltage mode 1	Voltage mode 2	Current mode
	-10V to +10V	0 to +10V	0 to 20 mA
-10.5V	-32768	–	–
-10.0V	-31276	–	–
-5.0V	-15638	–	–
0.0 V (0.0 mA)	0	0	0
+5.0 V (10 mA)	15638	15638	15638
+10.0 V (20 mA)	31276	31276	31276
+10.5 V (21 mA)	32767	32767	32767

- If the voltage exceeds +10.0 V or more, the linearity is not guaranteed.

(2) Voltage Mode 1 (-10V to +10V)

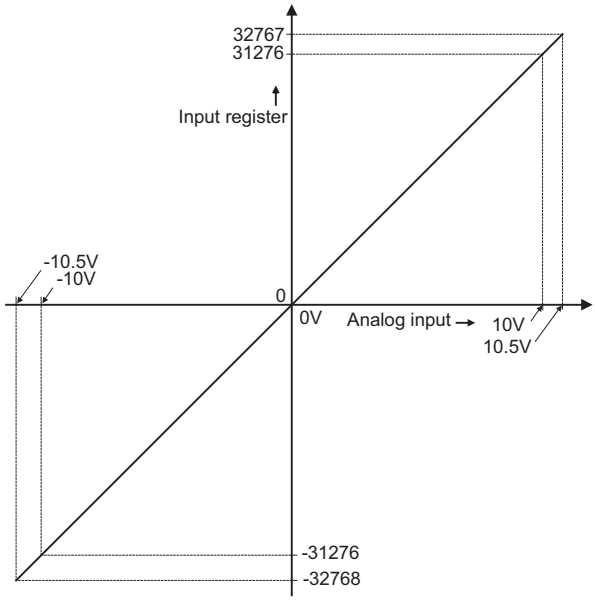

(3) Voltage Mode 2 (0V to +10V) and Current Mode (0 to 20 mA)

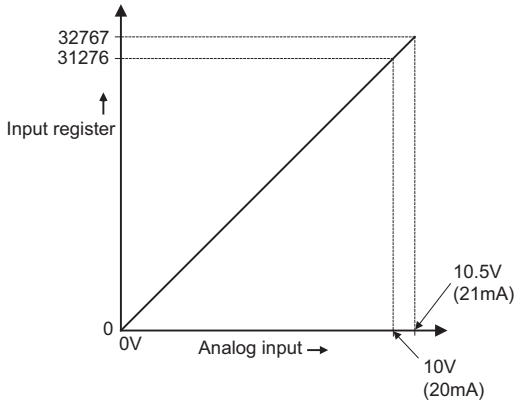

2.2 AI-01 Module Connections

2.2.1 Specifications on Cable and Connector

(1) Connector Specifications

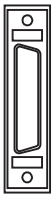

Connector	Connector Name	No. of Pins	Connector Model		
			Module	Cable	Manufacturer
Analog Input Connector	CN1/CN2	26	10226-52A3PL	・Connector 10126-3000PE ・Shell 10326-52A0-008 (Screw-locked type) 10326-52F0-008 (One-touch- lock type)	Sumitomo 3M Limited

2

(2) Connector Models and External Appearance of Standard Cable

Cable	Model	Length	Appearance (JEPMC-W6080-□□-E)
Cable for AI-01 Module	JEPMC-W6080-05-E	0.5 m	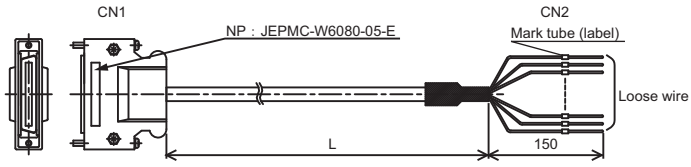
	JEPMC-W6080-10-E	1 m	
	JEPMC-W6080-30-E	3 m	

(3) Standard Cable Wiring

The following table shows the wiring for the JEPMC-W6080-□□-E standard cable loose wire.

CN1 26-pin Terminal No.	Wire Color	Dot Color	Dot Mark	CN2 Mark Tube (Label)	Twisted-pair Wire
1	Gray	Red	— — —	V1	
2	Gray	Black	— — —	G1V	
	Orange	Black	— — —	G1A	
3	Orange	Red	— — —	A1	
14	Yellow	Red	—	DP1	
16	Yellow	Black	—	DN1	
4	Pink	Red	— —	V2	
5	Pink	Black	— —	G2V	
	Yellow	Black	— —	G2A	
6	Yellow	Red	— —	A2	
17	White	Red	—	DP2	
19	White	Black	—	DN2	
7	White	Red	— —	V3	
8	White	Black	— —	G3V	
	Gray	Black	— —	G3A	
9	Gray	Red	— —	A3	
20	Gray	Red	—	DP3	
22	Gray	Black	—	DN3	

CN1 26-pin Terminal No.	Wire Color	Dot Color	Dot Mark	CN2 Mark Tube (Label)	Twisted-pair Wire
10	Orange	Red	— —	V4	
11	Orange	Black	— —	G4V	
	Pink	Black	—	G4A	
12	Pink	Red	—	A4	
23	Orange	Red	—	DP4	
25	Orange	Black	—	DN4	

Note: The cable is shielded twisted-pair and connected to connector shell of CN1 by metal-clamp.

2.2.2 Connector Pin Arrangement

The following table shows the connector (CN1, CN2) of the pin arrangement and the terminal layout for the AI-01 module.

(1) CN1 Pin Arrangement and Terminal Layout

Pin Arrangement at Connection Side

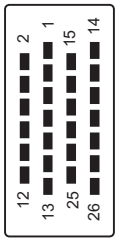

2	G1	1	V1	15	(G1)	14	MDP1
4	V2	3	A1	17	MDP2	16	MDN1
6	A2	5	G2	19	MDN2	18	(G2)
8	G3	7	V3	21	(G3)	20	MDP3
10	V4	9	A3	23	MDP4	22	MDN3
12	A4	11	G4	25	MDN4	24	(G4)
		13	–			26	–

[a] Terminal Specifications

No.	Signal Name	Function	No.	Signal Name	Function
1	V1	Voltage input 1	14	MDP1	Mode selection terminal 1
2	G1	Ground 1	15	(G1)	(Ground 1)
3	A1	Current input 1	16	MDN1	Mode selection terminal 1
4	V2	Voltage input 2	17	MDP2	Mode selection terminal 2
5	G2	Ground 2	18	(G2)	(Ground 2)
6	A2	Current input 2	19	MDN2	Mode selection terminal 2
7	V3	Voltage input 3	20	MDP3	Mode selection terminal 3
8	G3	Ground 3	21	(G3)	(Ground 3)
9	A3	Current input 3	22	MDN3	Mode selection terminal 3
10	V4	Voltage input 4	23	MDP4	Mode selection terminal 4
11	G4	Ground 4	24	(G4)	(Ground 4)
12	A4	Current input 4	25	MDN4	Mode selection terminal 4
13	–	–	26	–	–

(2) CN2 Pin Arrangement and Terminal Layout

[a] Pin Arrangement at Connection Side

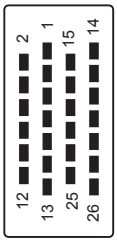

2	G5	1	V5	15	(G5)	14	MDP5
4	V6	3	A5	17	MDP6	16	MDN5
6	A6	5	G6	19	MDN6	18	(G6)
8	G7	7	V7	21	(G7)	20	MDP7
10	V8	9	A7	23	MDP8	22	MDN7
12	A8	11	G8	25	MDN8	24	(G8)
		13				26	

[b] Terminal Specifications

No.	Signal Name	Function	No.	Signal Name	Function
1	V5	Voltage input 5	14	MDP5	Mode selection terminal 5
2	G5	Ground 5	15	(G5)	(Ground 5)
3	A5	Current input 5	16	MDN5	Mode selection terminal 5
4	V6	Voltage input 6	17	MDP6	Mode selection terminal 6
5	G6	Ground 6	18	(G6)	(Ground 6)
6	A6	Current input 6	19	MDN6	Mode selection terminal 6
7	V7	Voltage input 7	20	MDP7	Mode selection terminal 7
8	G7	Ground 7	21	(G7)	(Ground 7)
9	A7	Current input 7	22	MDN7	Mode selection terminal 7
10	V8	Voltage input 8	23	MDP8	Mode selection terminal 8
11	G8	Ground 8	24	(G8)	(Ground 8)
12	A8	Current input 8	25	MDN8	Mode selection terminal 8
13			26		

2.2.3 Circuit Configuration and Connection Example

(1) AI-01 Module Circuit Configuration

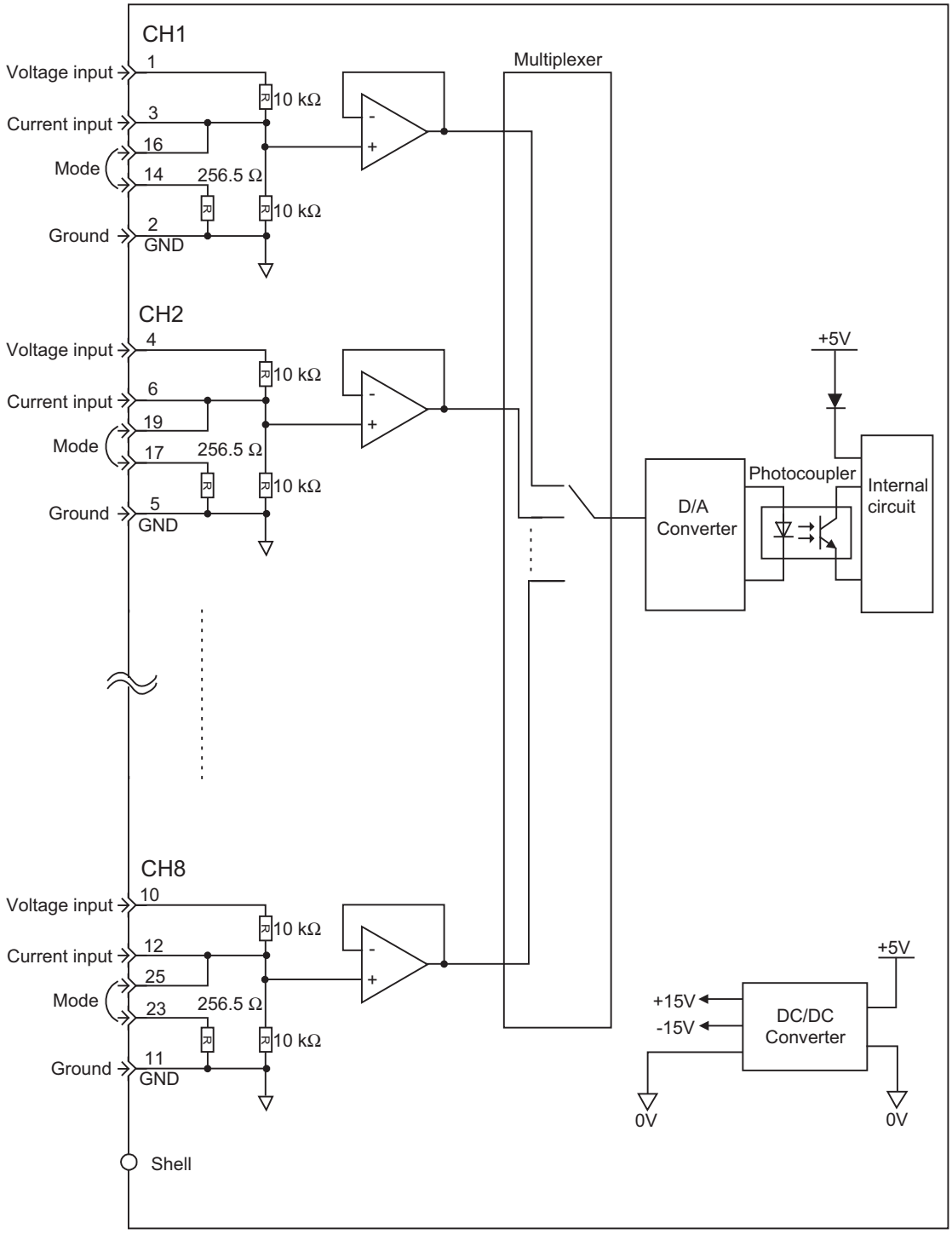

(2) AI-01 Module Connection Example (CN1)

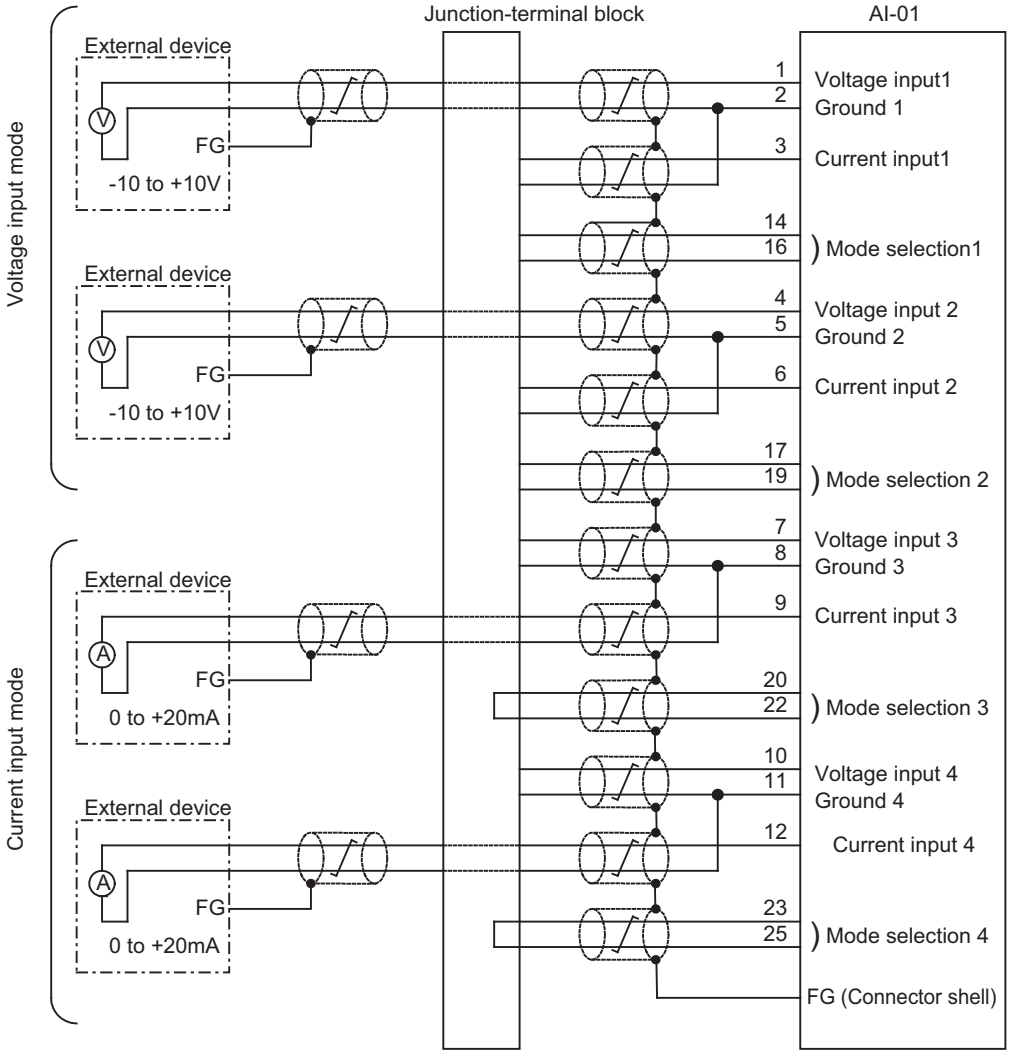

- Use a standard cable (JEPMC-W6080-□□-E) to connect the AI-01 Module to an external device. Use the junction-terminal block, because the distances between each external device and the module vary.
- Ground the cable shield between the external devices and the junction-terminal block on the external-device end.

■ Using with Voltage Input Mode 1 and 2

Open each mode-selection terminal, terminals 1 to 8, and do not connect to the current-input terminals 1 to 8.

■ Using with Current Input Mode

Short-circuit each mode-selection terminal, terminals 1 to 8, and do not connect to the voltage-input terminals 1 to 8.

2.3 AI-01 Module Settings

This section describes the items to be set using the MPE720 after connecting the AI-01 Module.

- After connecting the AI-01 Module, use the following procedures to select the input mode, offset/gain, and self configuration. If self configuration is performed after setting the input mode and offset/gain, the values will return to their default values.

2.3.1 Setting the Input Mode

The AI-01 Module has three input modes

- Voltage Mode 1 (Input range: -10 V to +10 V)
- Voltage Mode 2 (Input range: 0 V to +10 V
- Current Mode (Input range: 0 mA to 20 mA)

The input mode for each channel must be selected both on the machine and in the MPE720 program. Both settings must match.

For information on how to select the input mode on the machine, refer to *2.2.3 (2) AI-01 Module Connection Example (CN1)* on page 2-29.

In the MPE720 program ver. 5.31 or later, select the input mode for the channel to be used in the AI-01 Configuration window.

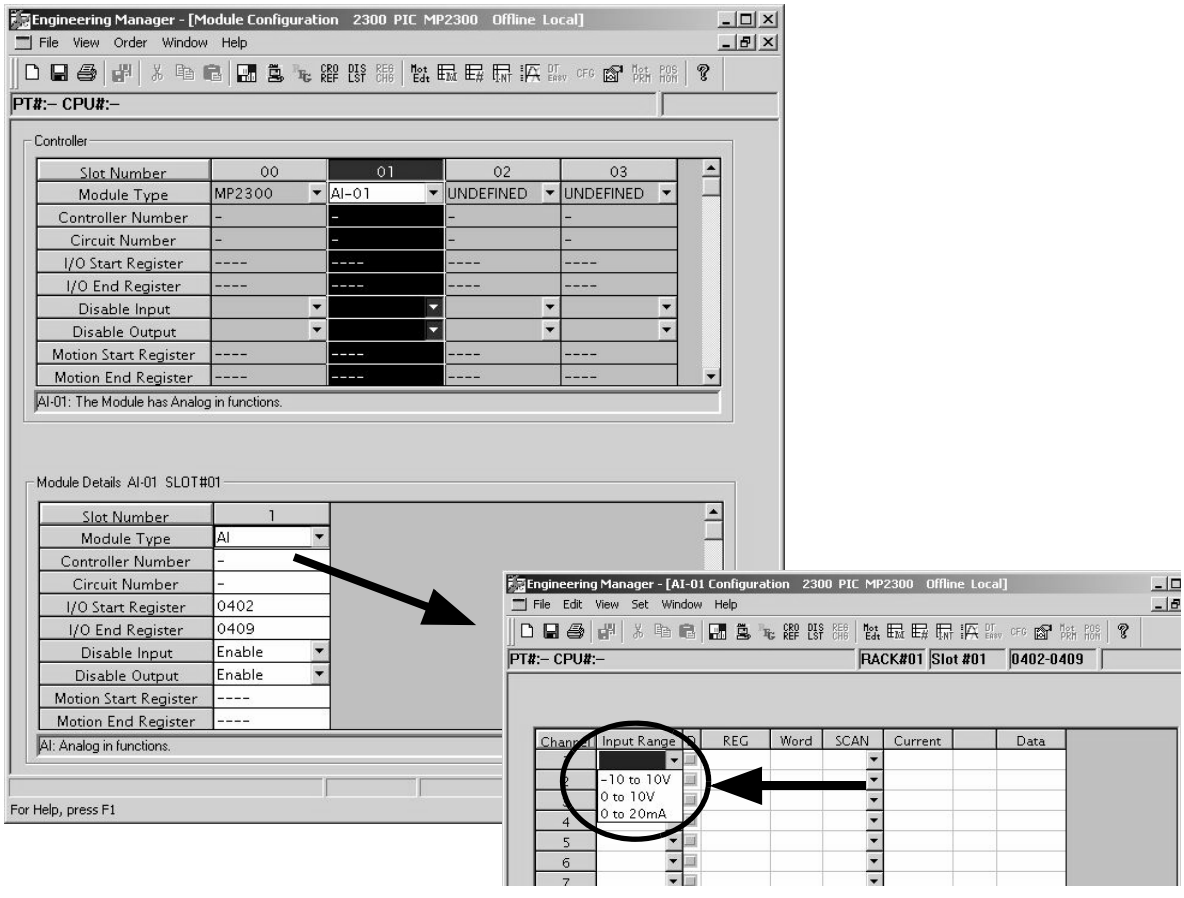

2.3.2 Setting the Offset/Gain

The offset/gain settings do not usually have to be adjusted. The AI-01 Module has been adjusted before shipment so the appropriate value is input for the specified voltage or current. If more precise adjustments are required, use the following procedure to adjust the offset/gain.

1. After selecting the channel number in the AI-01 Configuration window, select ***Set*** and then ***Offset/Gain***.

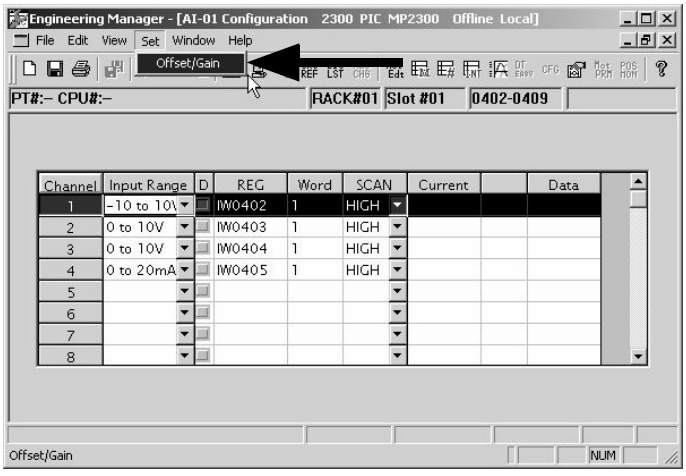

The *Set Offset/Gain* box will be displayed.

2. The voltage of the external device can be set to 0 V, 5 V, or 10 V. After changing the voltage, the current value displayed for the AI-01 Module will also change. Adjust the offset/gain accordingly so they are in accordance with the current value displayed for the AI-01 Module. Then click the OK button.

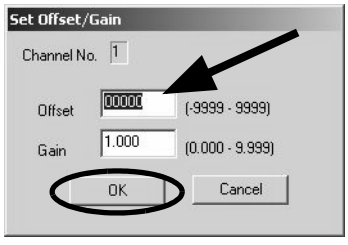

3. Repeat steps 1 and 2 for all channels to be used.

- The offset/gain adapted value will be stored in the input register (I register):
  Input register = A/D conversion value × Gain + Offset
- The default values of the offset and gain are as follows.
  Offset: 0000
  Gain: 1.000
  If using the default values, the Input register value equals the A/D conversion value.

2.3.3 Self Configuration

The MP2300, MP2200, and MP2100M machine controllers in the MP2000-series have a self configuration function. With self configuration, the I/O leading and end registers for the AI-01 Module will be automatically allocated and all of the channels will be shown as being unused if (no channel has been selected in the AI-01 Configuration window).

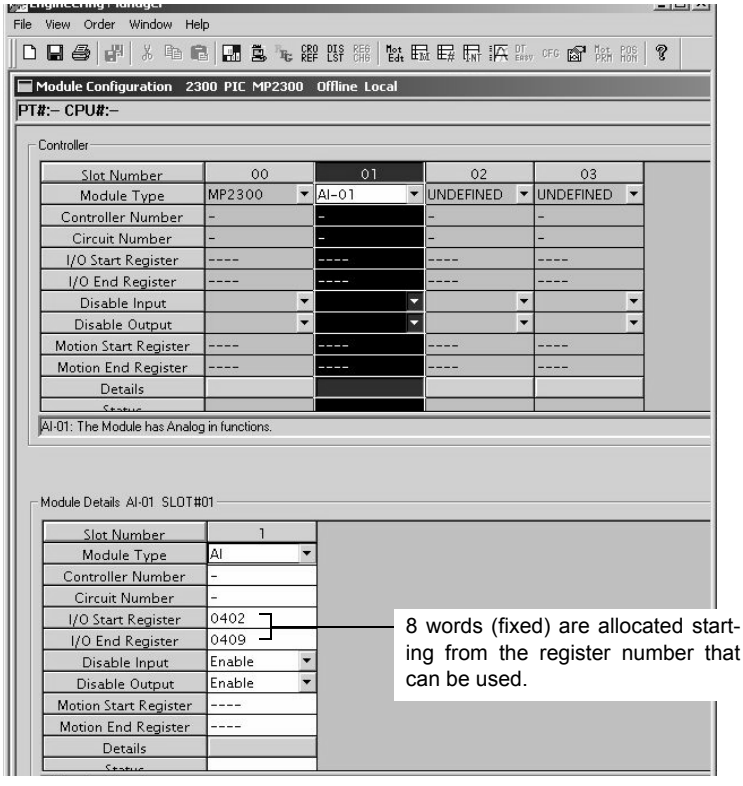

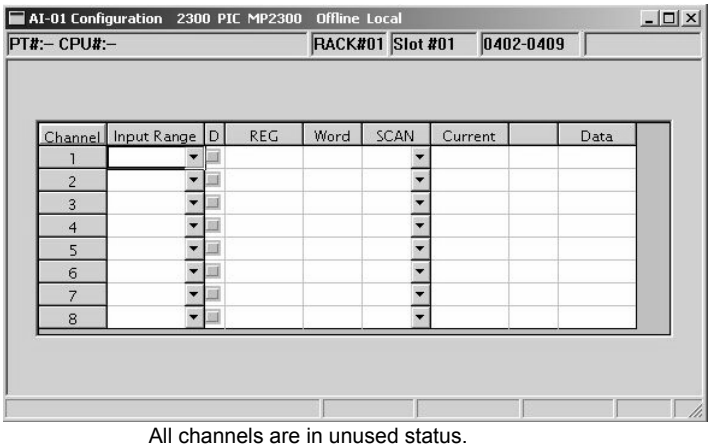

All channels are in unused status.

3

AO-01 Module

This chapter explains the detailed specifications and functions, connection methods, and settings of the AI-01 Module.

3.1 AO-01 Module Specifications

This section explains the appearance, function, and specifications of the AO-01 module.

3.1.1 AO-01 Module Function and External dimensions

The AO-01 module has four channels for analog input. Two types of analog-output ranges are available – Voltage: -10 V to +10 V, Voltage: 0 V to +10 V.
A maximum of two modules can be mounted in the MP2300 option slot, 30 modules in the MP2000 base unit if four units are connected and CPU-01 is used or 31 if CPU-02 is used; and 24 modules in the MP2100M or MP2100MEX expansion racks if three racks are connected.

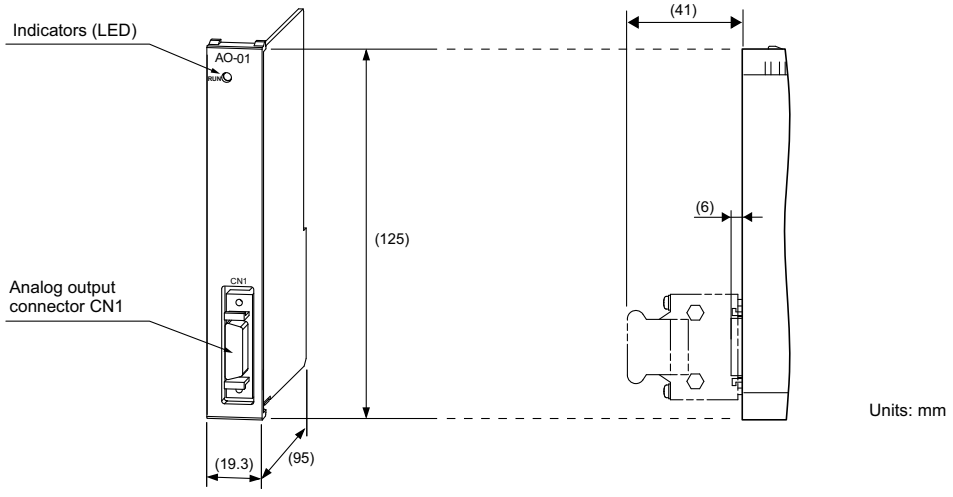

AO-01 Module Appearance

External Dimensions when installing the cable connector (side view)

3.1.2 Specifications

The following table shows the general and hardware specifications, and the details of LED of the AO-01 module.

(1) General Specifications

Item		Specifications
Environmental Conditions	Ambient Operating Temperature	0 to 55 °C
	Ambient Storage Temperature	-25 to 85 °C
	Ambient Operating Humidity	30% to 95% (with no condensation)
	Ambient Storage Humidity	5% to 95% (with no condensation)
	Pollution Level	Pollution level 1 (conforming to JIS B 3501)
	Corrosive Gas	There must be no combustible or corrosive gas.
	Operating Altitude	2,000 m above sea level or lower

Item		Specifications
Mechanical Operating Conditions	Vibration Resistance	Conforming to JIS B 3502: 10 to 57 Hz with single-amplitude of 0.075 mm 57 to 150 Hz with fixed acceleration of 9.8 m/s^2 10 sweeps each in X, Y, and Z directions (sweep time: 1 octave/min)
	Shock Resistance	Conforming to JIS B 3502: Peak acceleration of 147 m/s^2 (15 G) twice for 11 ms each in the X, Y, and Z directions
Electrical Operating Conditions	Noise Resistance	Conforming to EN 61000-6-2, EN 55011 (Group 1, Class A) Power supply noise (FT noise): 2 Kv min., for one minute Radiation noise (FT noise): 1 Kv min., for one minute
Installation Requirements	Ground	Ground to 100 Ω max.
	Cooling Method	Natural cooling

3

(2) Hardware Specifications

Items			Specifications	
Description			I/O Module	
Name			AO-01	
Model No.			JAPMC-AN2310-E	
Analog Output	Number of Channels		4 channels	
	Setting of the channels used		1 to 4 channels (Optional)	
	Insulation		Between channels: non-insulated Between output connector and system power supply: photocoupler insulation	
	Analog Output Range		-10V to +10V	0 to +10V
	Digital Resolution		16Bit (-31276 to +31276)	15Bit (0 to +31276)
	Accuracy	25°C	±0.1% (±10mV)	
		0 to 55°C	±0.3% (±30mV)	
	Max. Allowable Load Current		±5mA	
	Output Conversion Time*2		1.2msec*	
Connector			CN1: Output connector	
Indicator			RUN (Green)	
Current Consumption			500mA or less	
Dimensions			Height: 125 mm Depth: 95 mm	
Mass			90 g	

* After change with a full scale of -10 V to + 10 V.

(3) LED Indicator

RUN

Indicator name	Indicator Color	Status when ON	Status when OFF
RUN	Green	Operates correctly	No operate

3.1.3 Output Characteristics

This section explains the output characteristics table corresponding to the analog output value and voltage and current mode, and output characteristic drawings.

(1) Output Characteristics Corresponding Table

Analog output value	Output Register	
	Output range 1 (-10V to +10V)	Output range 2 (0 to +10V)
-10.5V	-32768	—
-10.0V	-31276	—
-5.0V	-15638	—
0.0V	0	0
+5.0V	15638	15638
+10.0V	31276	31276
+10.5V	32767	32767

- If the mode exceeds +10.0V or more, the linearity is not guaranteed.

(2) Output Characteristics Drawing for Output Range 1 (-10V to +10V)

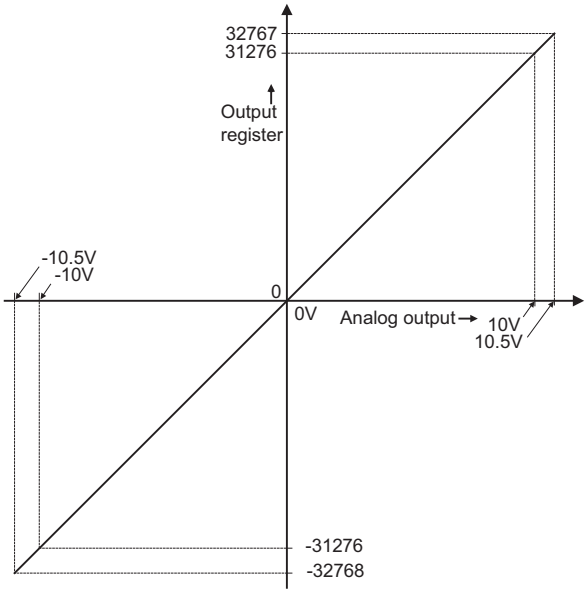

(3) Output Characteristics Drawing for Output Range 2 (-10V to +10V)

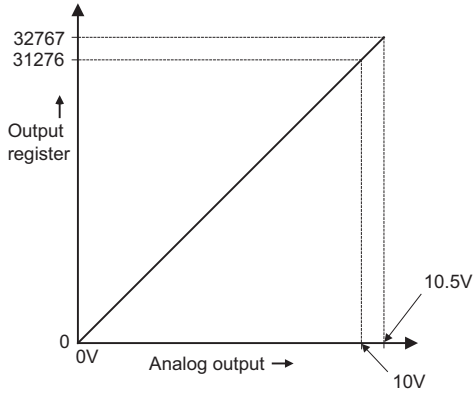

3.2 AO-01 Module Connections

3.2.1 Specifications on Cable and Connector

(1) Connector Specifications

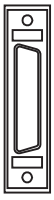

Connector	Connector Name	No. of Pins	Connector Model		
			Module	Cable	Manufacturer
Analog Output Connector	CN1	20	10220-52A3PL	・Connector 10120-3000PE ・Shell 10320-52A0-008 (Screw lock) 10320-52F0-008 (One-touch lock)	Sumitomo 3M Limited

3

(2) Connector Models and External Appearance of Standard Cable

Cable	Model	Length	Appearance (JEPMC-W6090-□□-E)
Cable for AO-01Module	JEPMC-W6090-05-E	0.5 m	
	JEPMC-W6090-10-E	1 m	
	JEPMC-W6090-30-E	3 m	

(3) Standard Cable Wiring

The following table shows the wiring for the JEPMC-W6090-□□-E standard cable loose wire.

CN1 20-pin Terminal No.	Wire Color	Dot Color	Dot Mark	CN2 Mark Tube (Label)	Twisted-pair Wire
1	Orange	Red	—	AO0	
3	Orange	Black	—	AO0G	
2	Gray	Red	—	AO1	
4	Gray	Black	—	AO1G	
6	White	Red	—	AO2	
8	White	Black	—	AO2G	
7	Yellow	Red	—	AO3	
9	Yellow	Black	—	AO3G	

Note: The cable is shielded twisted-pair and connected to connector shell of CN1 by metal-clamp.

3.2.2 Connector Pin Arrangement

The following table shows the connector (CN1) of the pin arrangement and the terminal layout for the AO-01 module.

(1) CN1 Pin Arrangement and Terminal Layout

Pin Arrangement at Connection Side

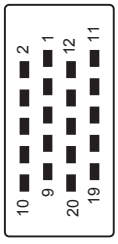

2	AO1	1	AO0	12	N.C.	11	N.C.
4	AO1G	3	AO0G	14	N.C.	13	N.C.
6	AO2	5	N.C.	16	N.C.	15	N.C.
8	AO2G	7	AO3	18	N.C.	17	N.C.
10	N.C.	9	AO3G	20	N.C.	19	N.C.

(2) Terminal Specifications

No.	Signal Name	Function	No.	Signal Name	Function
1	AO0	Analog output 0	11	N.C	Unused
2	AO1	Analog output 1	12	N.C	Unused
3	AO0G	Ground 0	13	N.C	Unused
4	AO1G	Ground 1	14	N.C	Unused
5	N.C.	Unused	15	N.C	Unused
6	AO2	Analog output 2	16	N.C	Unused
7	AO3	Analog output 3	17	N.C	Unused
8	AO2G	Ground 2	18	N.C	Unused
9	AO3G	Ground 3	19	N.C	Unused
10	N.C	Unused	20	N.C	Unused

3.2.3 AO-01 Module Connection Example (CN1)

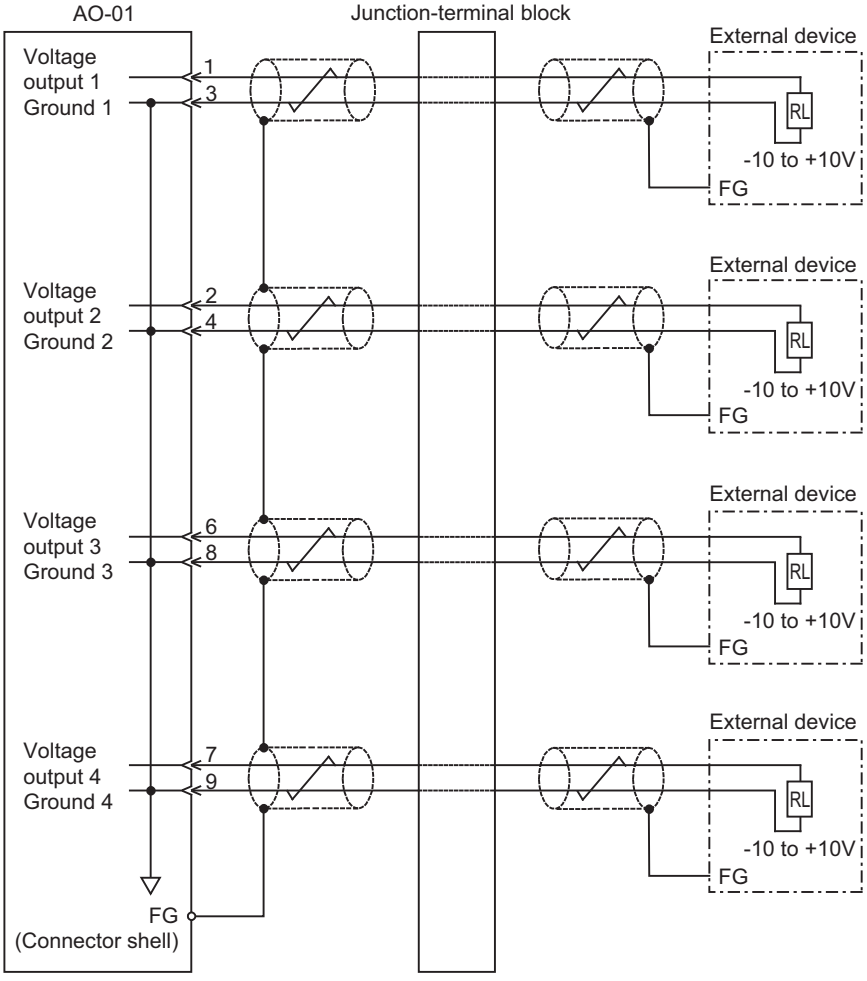

- Use the AO-01 standard cable (JEPMC-W6090-□□-E) for the connection to the external device. Use the junction terminal block because the distance between the external devices and the module are different as seen on the above diagram.
- Ground the cable shield between the external devices and the junction terminal block by the external device side.

3.3 AO-01 Module Settings

This section describes the items to be set using the MPE720 after connecting the AO-01 Module.

- After connecting the AO-01 Module, use the following procedures to select the input mode, offset/gain, and self configuration. If the self configuration is executed after having set the output range and offset/gain, the set values will be reset to their default values.

3.3.1 Setting the Output Range

The AO-01 Module has two output ranges

- Output Range 1: -10 V to +10 V
- Output Range 2: 0 V to +10 V

Start the MPE720 program. In the AO-01 Configuration window, select the output range for each channel to be used.

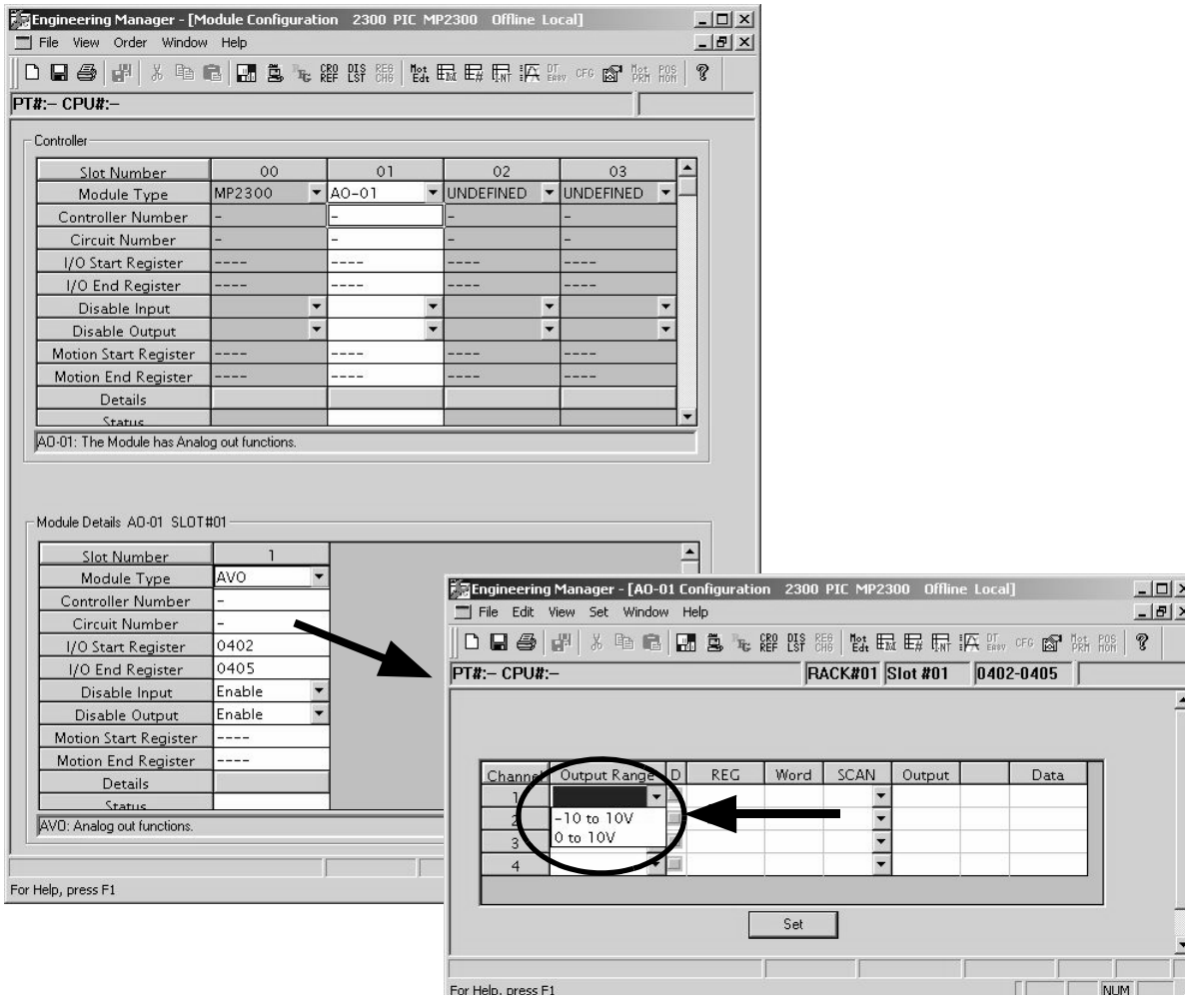

3.3.2 Setting the Offset/Gain

The offset/gain settings do not usually have to be adjusted. The AO-01 Module has been adjusted before shipment so the appropriate value is input for the specified voltage or current. If more precise adjustments are required, use the following procedure to adjust the offset/gain.

1. After selecting the channel number in the AO-01 Configuration Window, select ***Set*** and the ***Offset/Gain***.

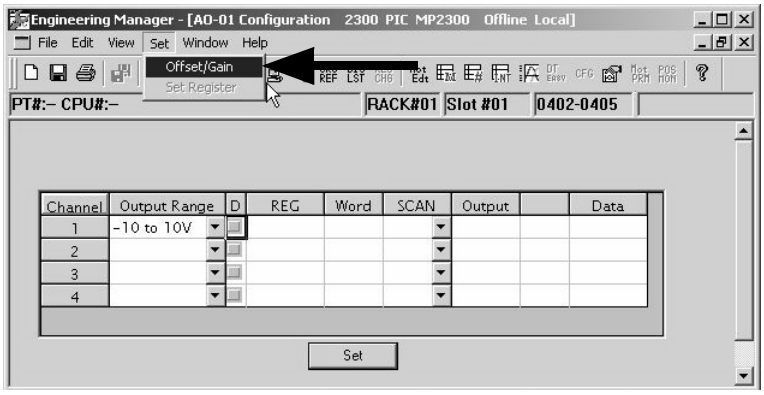

The *Set Offset/Gain* box will be displayed.

2. Set the output register to 0 (0 V), and measure the output voltage of the AO1 Module.

3. Calculate the offset of the output voltage using the following equation. Enter the result in the ***Offset Input*** box in the *Set Offset/Gain* box.

Offset value = AO1 × (–3127.6) (round off below decimal point)

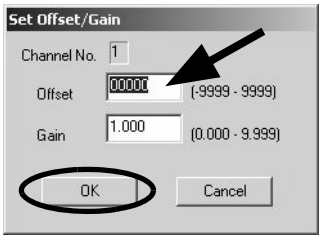

4. Click the **OK** button to save the offset value, and the dialog box will close.

5. Repeat step 1 to view the *Set Offset/Gain* box.

6. Set the output register to 31276 (10 V), and measure the output voltage of the AO2 module.

7. Calculate the gain of the output voltage using the following equation. Enter the result in the Gain Input box in the *Set Offset/Gain* box.

・If the voltage of AO2 is less than 10 volts,

Gain = 10.0 ÷ AO2 (Round to three decimal places.)

・If the voltage of AO2 is greater than 10 volts, gradually reduce the value of the output register from 31276 until the output voltage 10 V. The value of the output register if the output voltage is approximately 10 V is REG1.

Gain = REG1 ÷ 31276.0 (Round to three decimals places.)

8. Click the **OK** button to save the gain, and the dialog box will close.

- Offset default: 0000, Gain default: 1,000.

3.3.3 Self Configuration

The MP2300, MP2200, and MP2100M machine controllers in the MP2000-series have a self configuration function. With self configuration, the I/O leading and end registers for the AO-01 Module will be automatically allocated and all of the channels will be shown as being unused if (no channel has been selected in the AO-01 Configuration window).

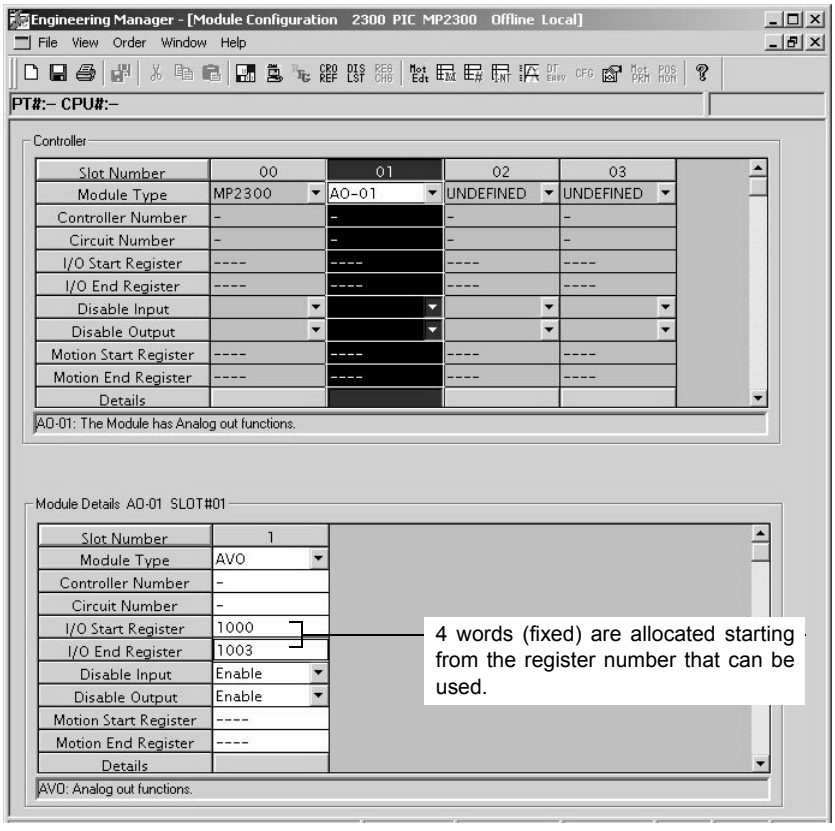

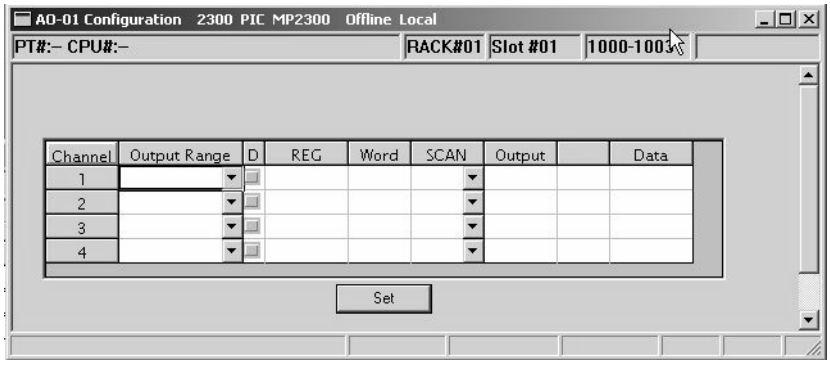

All channels are in unused status.

INDEX

A

I

M

O

R

Revision History

The revision dates and numbers of the revised manuals are given on the bottom of the back cover.

MANUAL NO. SIEP C880700 26A

Published in Japan September 2009 05-8 ◇1-1

- September 2009: Date of publication
- 05-8: Date of original publication
- ◇1: Revision number
- -1: WEB revision number

Date of Publication	Rev. No.	WEB Rev. No.	Section	Revised Contents
October 2012	◇6	0	Back cover	Revision: Address
January 2012	◇5	0	Back cover	Revision: Address
June 2011	◇4	0	–	SIEP C880700 26B<3>-1, available on the Web.
April 2011	◇3	1	2.1.3 (2), (3)	Revision: Voltage range for mode 1 and 2
March 2011		0	–	SIEP C880700 26A<2>-1, available on the Web.
November 2010	◇2	1	Front cover	Revision: Format
			2.2.1 (1), 3.2.1 (1)	Revision: Connector model
			2.2.1 (2), (3), 2.2.3 (2), 3.2.1 (2), (3), 3.2.3	Revision: Cable model
			Back cover	Revision: Address, format
May 2010		0	Front cover	Revision: Model
			2.2.1 (3), 3.2.1 (3)	Revision: Table of standard cable wiring
			–	SIEP C880700 26A<1>-2, available on the Web.
October 2009	◇1	2	2.1.2 (2)	Revision: Model No.
September 2009		1	Preface	Addition: Warranty
			Back cover	Revision: Address
September 2008		0	Preface	Addition: PL on fumigation
			2.2.1 (2), 3.2.1 (2)	Revision: Length and external appearance of standard cable
			2.2.1 (3)	Revision: Table of standard cable wiring
			Back cover	Revision: Address
August 2005	–	–	–	First edition

Machine Controller MP2000 Series

Analog Input/Analog Output Module
AI-01/AO-01 USER'S MANUAL

IRUMA BUSINESS CENTER (SOLUTION CENTER)
480, Kamifujisawa, Iruma, Saitama 358-8555, Japan
Phone 81-4-2962-5151 Fax 81-4-2962-6138

YASKAWA AMERICA, INC.
2121 Norman Drive South, Waukegan, IL 60085, U.S.A.
Phone (800) YASKAWA (800-927-5292) or 1-847-887-7000 Fax 1-847-887-7310

YASKAWA ELÉTRICO DO BRASIL LTDA.
Avenida Fagundes Filho, 620 São Paulo-SP CEP 04304-000, Brazil
Phone 55-11-3585-1100 Fax 55-11-5581-8795

YASKAWA EUROPE GmbH
Hauptstraβe 185, Eschborn 65760, Germany
Phone 49-6196-569-300 Fax 49-6196-569-398

YASKAWA ELECTRIC UK LTD.
1 Hunt Hill Orchardton Woods Cumbernauld, G68 9LF, United Kingdom
Phone 44-1236-735000 Fax 44-1236-458182

YASKAWA ELECTRIC KOREA CORPORATION
9F, Kyobo Securities Bldg. 26-4, Yeouido-dong, Yeongdeungpo-gu, Seoul, 150-737, Korea
Phone 82-2-784-7844 Fax 82-2-784-8495

YASKAWA ELECTRIC (SINGAPORE) PTE. LTD.
151 Lorong Chuan, #04-01, New Tech Park 556741, Singapore
Phone 65-6282-3003 Fax 65-6289-3003

YASKAWA ELECTRIC (CHINA) CO., LTD.
12F, Carlton Bld., No.21 HuangHe Road, HuangPu District, Shanghai 200003, China
Phone 86-21-5385-2200 Fax 86-21-5385-3299

YASKAWA ELECTRIC (CHINA) CO., LTD. BEIJING OFFICE
Room 1011, Tower W3 Oriental Plaza, No.1 East Chang An Ave.,
Dong Cheng District, Beijing 100738, China
Phone 86-10-8518-4086 Fax 86-10-8518-4082

YASKAWA ELECTRIC TAIWAN CORPORATION
9F, 16, Nanking E. Rd., Sec. 3, Taipei 104, Taiwan
Phone 886-2-2502-5003 Fax 886-2-2505-1280

YASKAWA ELECTRIC CORPORATION

MANUAL NO. SIEP C880700 26C

Published in Japan October 2012 05-8 ◇6-0
12-7-7